COLUMN

GLASS RAILINGS 514.63 - 1

01.02.2018

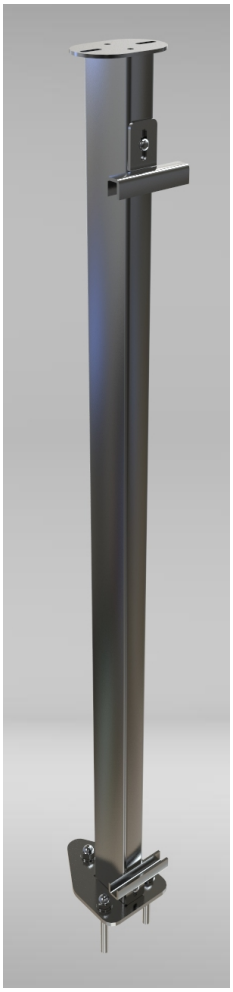

Glass thickness
1:5

U rubber profile

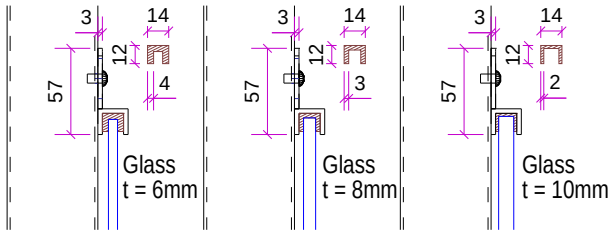

Front view

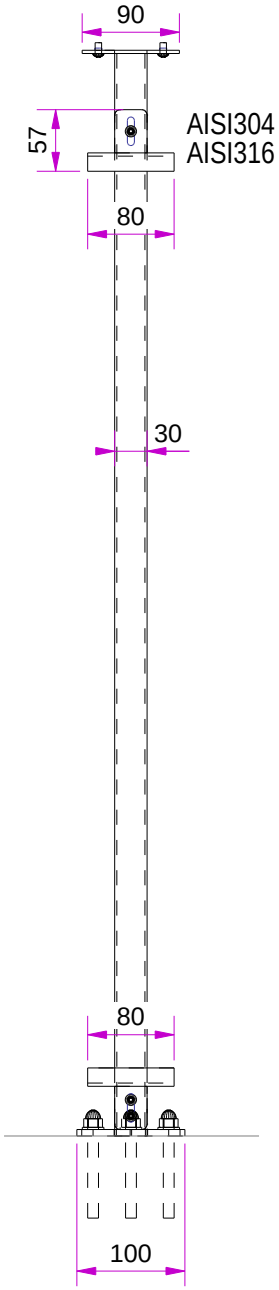

Side view

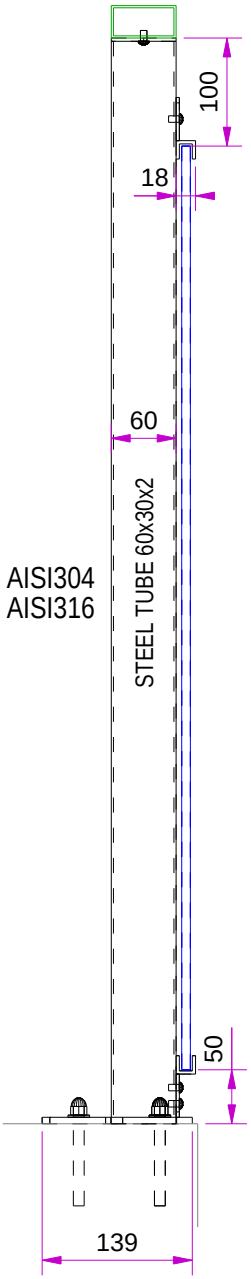

1:5

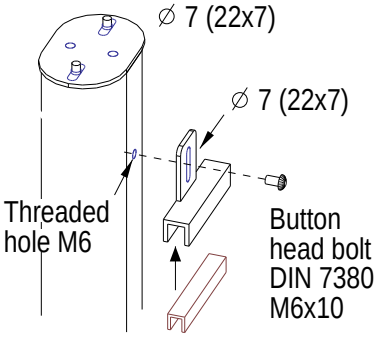

t = 3mm
AISI304
AISI316

1:5

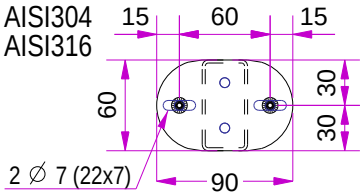

t = 6mm
AISI304
AISI316

1:5

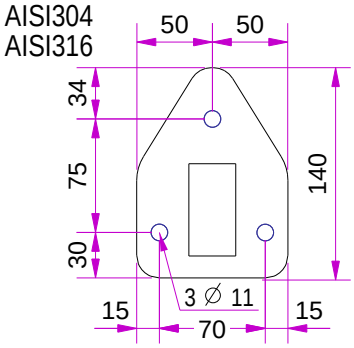

1:5

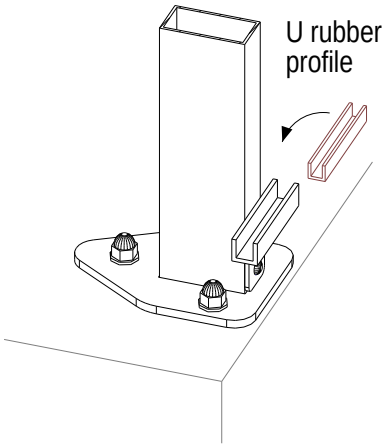

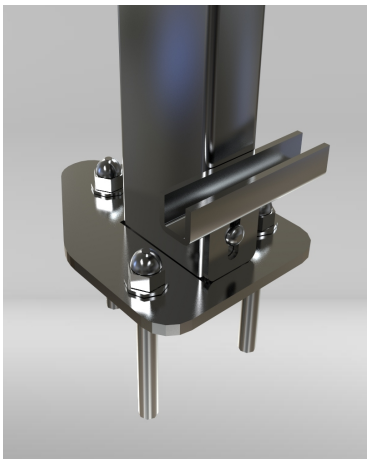

Hole diameter
11mm suitable for
Kzn concrete bolt,
anchor M8 or
chemical anchor

staBico

Producer: STABICO OU
Tallinn, Estonia
Tel: +372 555 17 989 e-mail: stabico@stabico.ee
Web: www.stabico.ee